The ATLAS detector consists of four major components:

ATLAS and the LHC

ATLAS will observe dramatic head-on collisions of pairs of protons whose total energy is 14 TeV. The protons will be accelerated to these high energies by the Large Hadron Collider (LHC)–an underground accelerator ring 27km in circumference. The LHC is filled with superconducting magnets to steer and focus the protons in beams that repeatedly circle the ring. The ambitious experimental programme of ATLAS will shed light on many unanswered questions about the origins of matter and the fundamental forces of nature.

The particle collisions

Measuring 46m long and 25m high, the ATLAS detector is the largest and one of the most elaborate particle physics experiments ever designed. The head-on collisions of protons at its centre leave debris that will reveal new particles and new processes in the interior of matter.

Various layers of the detector will track the trajectories of the charged particles and measure the energies of most charged and neutral particles. The curvature of particle tracks in the magnetic field will allow the momentum and electric charges to be determined. Out of nearly 1000 million collisions each second, only a few will have the special characteristics that might lead to new discoveries. The trigger system selects such events for recording and avoids storing immense amounts of unnecessary information.

Inner Detector
Measures the momentum of each charged particle

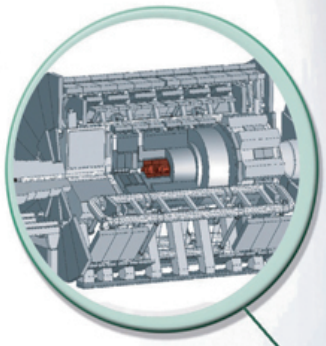

Calorimeter
Measures the energies carried by the particles

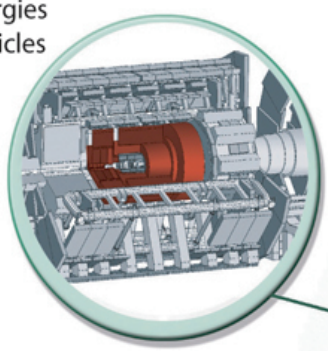

Muon Spectrometer
Identifies and measures the momenta of muons

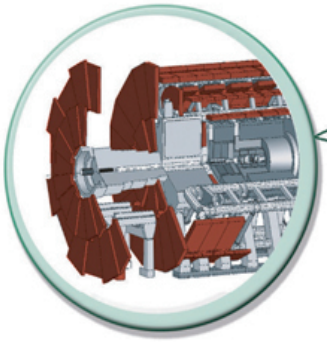

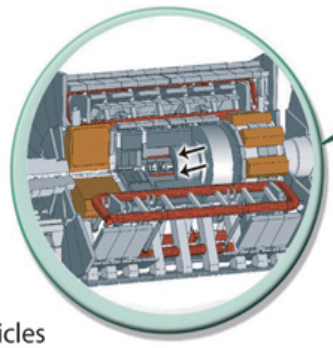

Magnet System
Bends charged particles for momentum measurement.
Arrows point to the solenoid magnet.
The larger objects are toroid magnets.

Detector