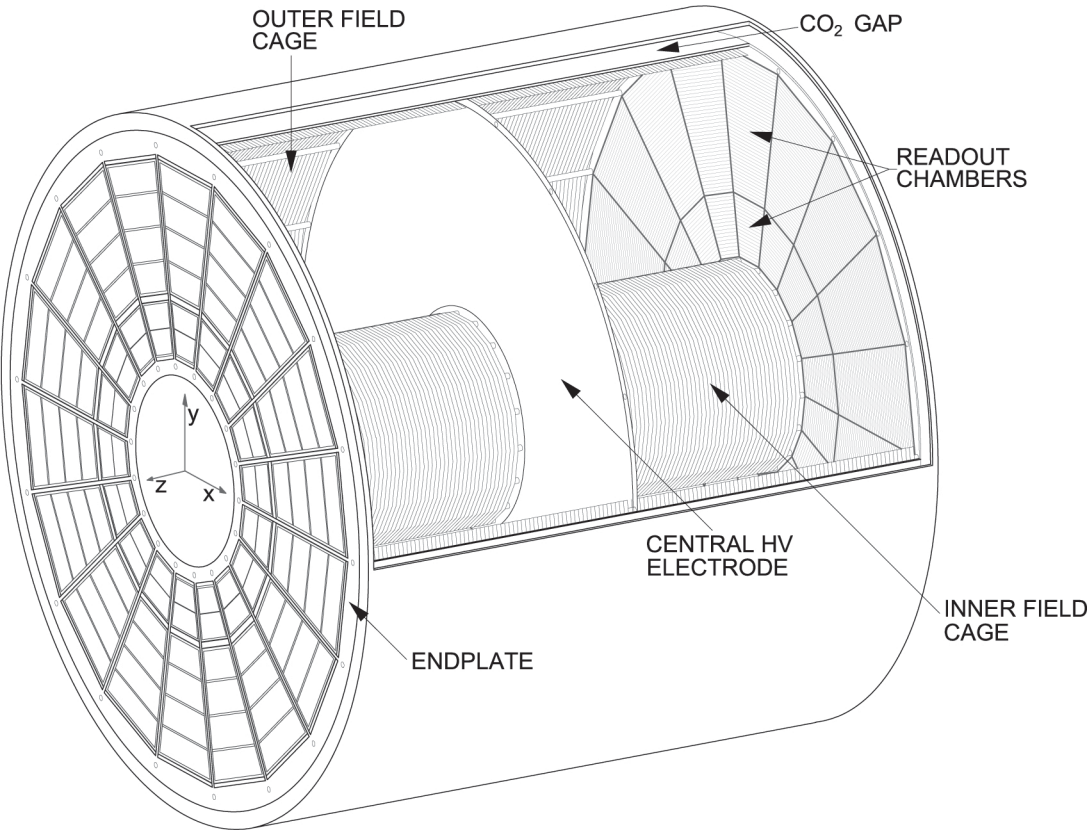
OUTER FIELD CAGE
CO_2 GAP
READOUT CHAMBERS
y
z
x
CENTRAL HV ELECTRODE
INNER FIELD CAGE
ENDPLATE